A1 SIZE – 594mm x 841mm

FUSE SCHEDULE

TB	IDENTIFIER	SIZE	RATED CURRENT
TB21	F01	5x20mm	5A TD
	F02	5x20mm	5A TD
	F03	5x20mm	5A TD
	F04	5x20mm	5A TD
	F05	5x20mm	1A FA
	F06	5x20mm	1A FA
	F07A	5x20mm	0.5A FA
	F07B	5x20mm	0.5A FA
	F08	5x20mm	0.5A FA
	F09	5x20mm	0.5A FA

NOTES
FA = FAST ACTING
TD = TIME DELAY

TERMINAL LAYOUT TB21

F01, F02, F03, F04, F05, F06, F07A, F07B, F08, F09, C0, C01, C02, C03, C04, C05, C06, C07A, C07B, C08, C09

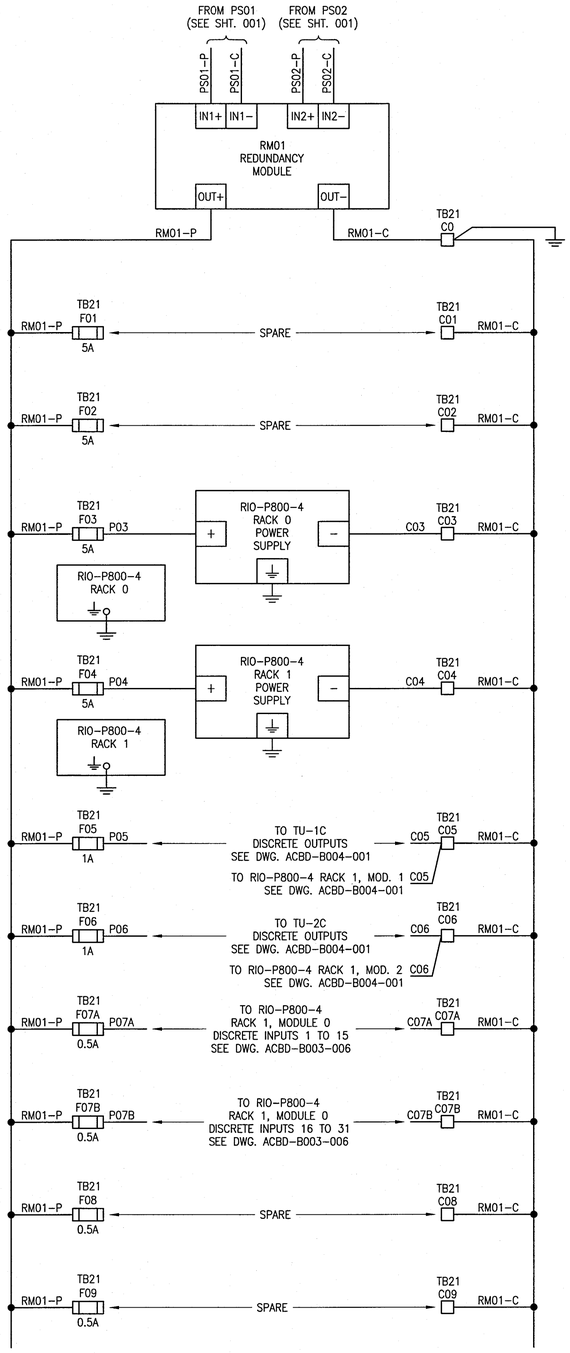

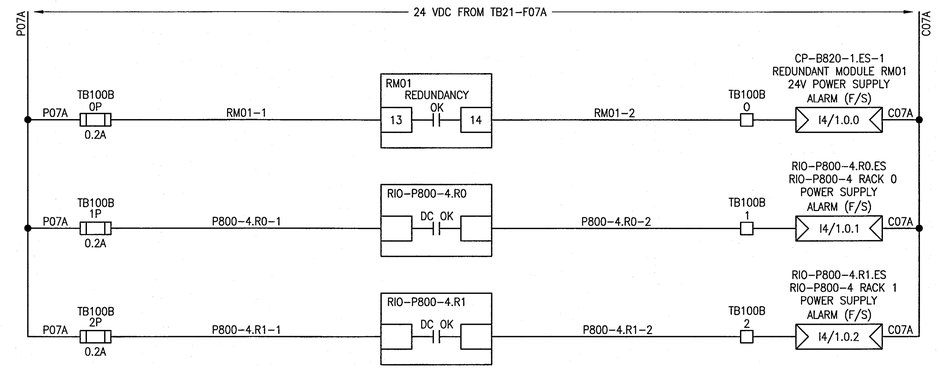

POWER CONSUMPTION SCHEDULE AT 24 VDC

LOAD	QTY.	CURRENT (mA)	SUBTOTAL (mA)	NOTES
RIO–P800–4.R0	1	1650	1650	1
RIO–P800–4.R1	1	1650	1650	1
DISCRETE OUTPUTS	32	24	768	3
DISCRETE INPUTS	32	2.5	80	2
TOTAL			4148	

NOTES
1. BASED ON MAXIMUM SUPPLY CURRENT ON POWER SUPPLY DATA SHEET.
2. BASED ON DATA SHEET.
3. BASED ON INFI90 TERMINATION UNIT DATA SHEET.

LEGEND:

EQUIPMENT GROUND

REFERENCE DRAWINGS	DESCRIPTION
1–0102–ACBD–B001	CABINET LAYOUT, CP–B820–1 AND CP–B820–2

APEGM Certificate of Authorization
SNC-Lavalin Inc.
No. 4489

NO.	REVISIONS	DATE	DESIGN	CHECK
00	ISSUED FOR CONSTRUCTION – 976–2016	2017/04/05	MW	TMC

CH2MHILL. SNC·LAVALIN KGS GROUP

DESIGNED BY: M. WANG
CHECKED BY: T. CHURCH
DRAWN BY: MJ. PERSSON
APPROVED BY: E. RYCZKOWSKI
SCALE: NTS
ISSUED FOR CONSTRUCTION BY: J. SHUMKA
DATE: 2014/05/26
DATE: 2017/04/05
CONSULTANT NO.: 474248

ENGINEER'S SEAL
PROVINCE OF MANITOBA
T.M. CHURCH
Member 32682
REGISTERED PROFESSIONAL ENGINEER
Apr. 5, 2017

Winnipeg
THE CITY OF WINNIPEG
WATER AND WASTE DEPARTMENT

SOUTH END WATER POLLUTION CONTROL CENTRE
SEWPCC UPGRADING/EXPANSION PROJECT
AUTOMATION – POWER DISTRIBUTION SCHEMATIC
SERVICE BUILDING
CP–B820–1 AND CP–B820–2, RIO–P800–4 CABINET

CITY DRAWING NUMBER	SHEET	REV.	SIZE
1–0102–ACBD–B002	002	00	A1

LAST SAVE: 2017/04/01 – 10:09am
PATH: C:\pw_workdir\ch2mhill_wbg\sh043264\d0356273\1–0102–ACBD–B002–002.dwg

PLOT DATE: Apr 01, 2017 – 10:09am
FILE NAME: 1–0102–ACBD–B002–002.dwg